RADIANTE 800 STANDARD INSTALLATION

LEGEND

- ● Firebox Dimension
- ▲ Exact Dimension
- ■ Minimum Dimension
- Air Intake
- Air Outlet
- Brick Masonry

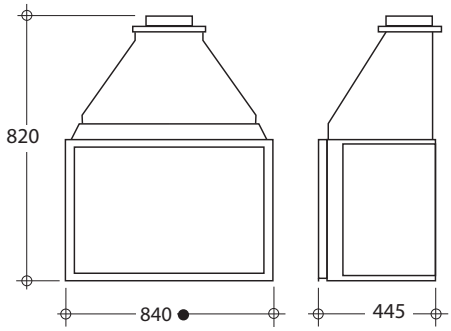

NOTES:

[1] Air intake grilles minimum air flow area required = 180cm² each side.
[2] Air outlet grilles minimum air flow area = 240cm² each side and 480cm² if one grille is used.
[3] Hearth height dimensions optional (Refer to Technical Data & Installation Instructions)
[4] All dimensions in millimetres.
[5] Heater can be left freestanding.
[6] Do not scale from these diagrams
[7] Air transfer kits mandatory for exempt units to comply to AS/NZ 4012/4013:2014. Fan optional depending on duct length. (Refer to Technical Data & Installation Instructions)

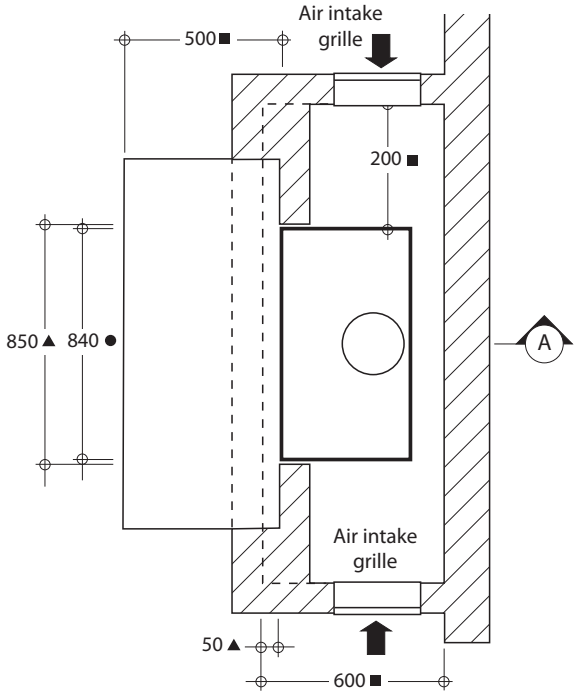

FIREPLACE CONSTRUCTION STEP 1

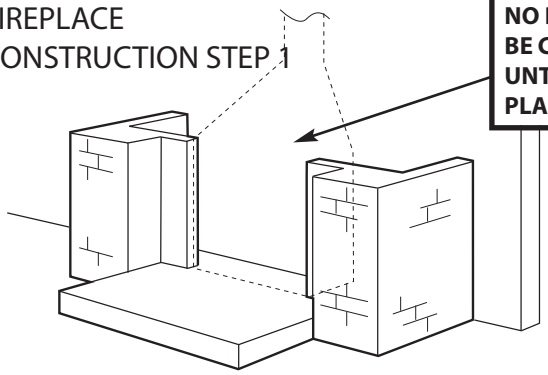

IMPORTANT: NO BRICKWORK TO BE COMMENCED UNTIL FIREBOX IS PLACED IN POSITION

FIREPLACE CONSTRUCTION STEP 2

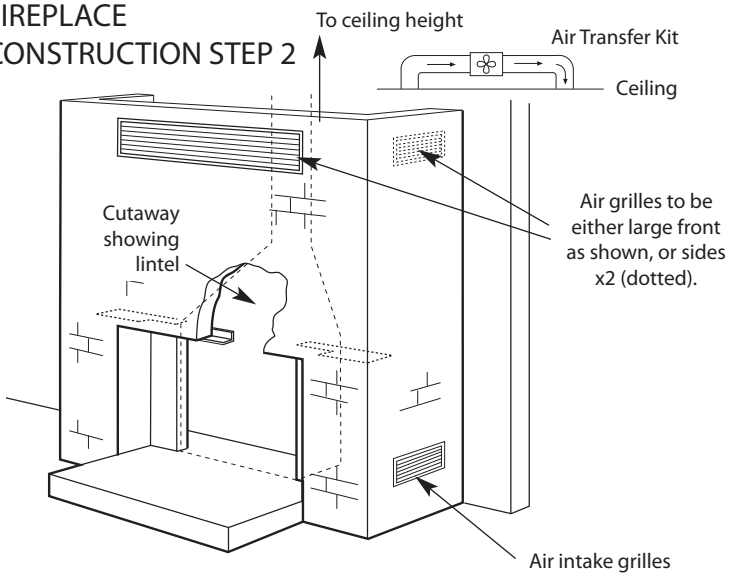

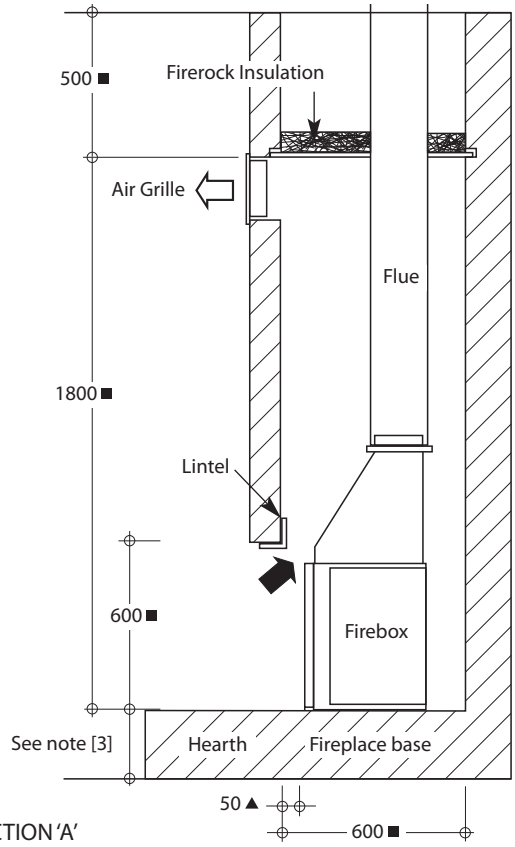

SECTION 'A'

CHEMINÉES PHILIPPE AUSTRALIA

430 Johnston St., Abbotsford, Victoria 3067 Phone: 03 9417 3315
e-mail: sales@wignells.com.au www.chemphilaust.com.au

April 2018

Cheminees Philippe's policy is one of continuous development. We reserve the right to change sizes and specifications without notice.

RADIANTE 800 OPTIONAL INSTALLATION 1

LEGEND

- ● Firebox Dimension
- ▲ Exact Dimension
- ■ Minimum Dimension
- Air Intake
- Air Outlet
- Brick Masonry

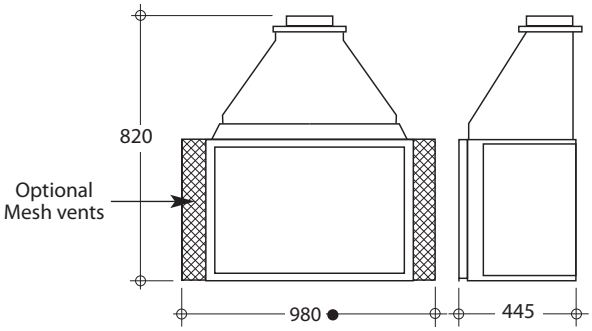

NOTES:

[1] Air intake grilles minimum air flow area required = 180cm² each side.
[2] Air outlet grilles minimum air flow area = 240cm² each side and 480cm² if one grille is used.
[3] Hearth height dimensions optional (Refer to Technical Data & Installation Instructions)
[4] All dimensions in millimetres.
[5] Heater can be left freestanding.
[6] Do not scale from these diagrams
[7] Air transfer kits mandatory for exempt units to comply to AS/NZ 4012/4013:2014. Fan optional depending on duct length. (Refer to Technical Data & Installation Instructions)

980

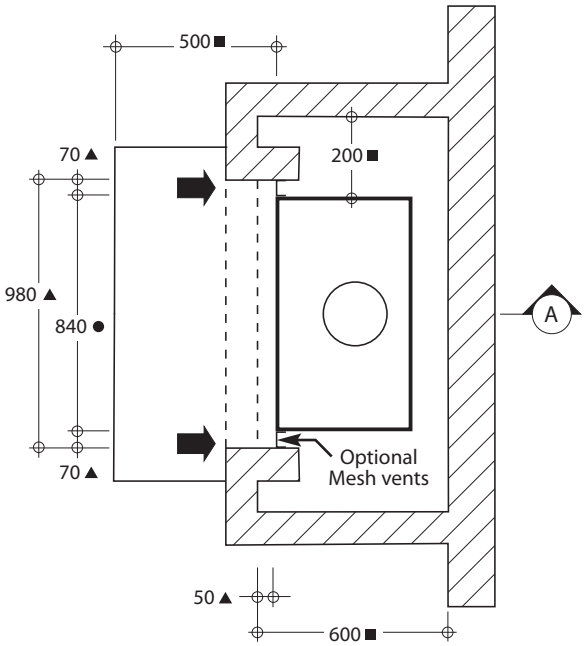

FIREPLACE CONSTRUCTION STEP 1

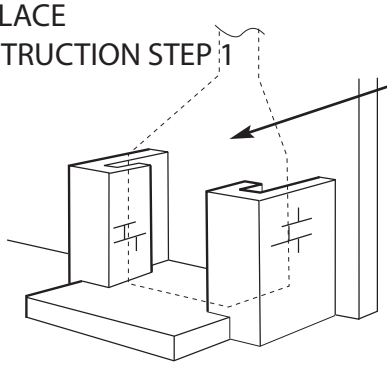

IMPORTANT: NO BRICKWORK TO BE COMMENCED UNTIL FIREBOX IS PLACED IN POSITION

FIREPLACE CONSTRUCTION STEP 2

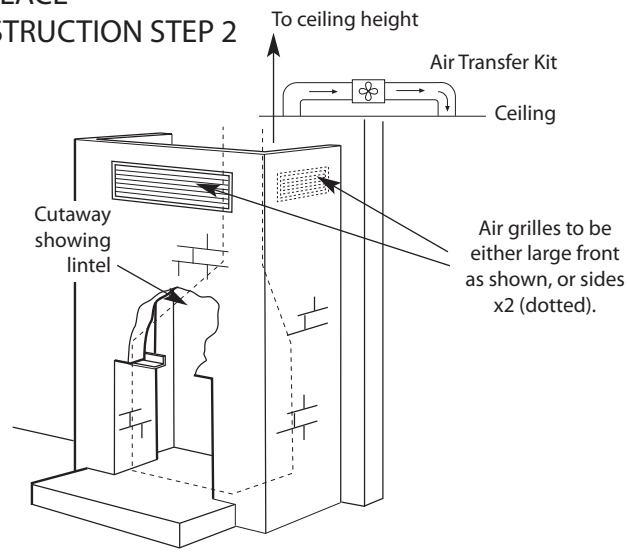

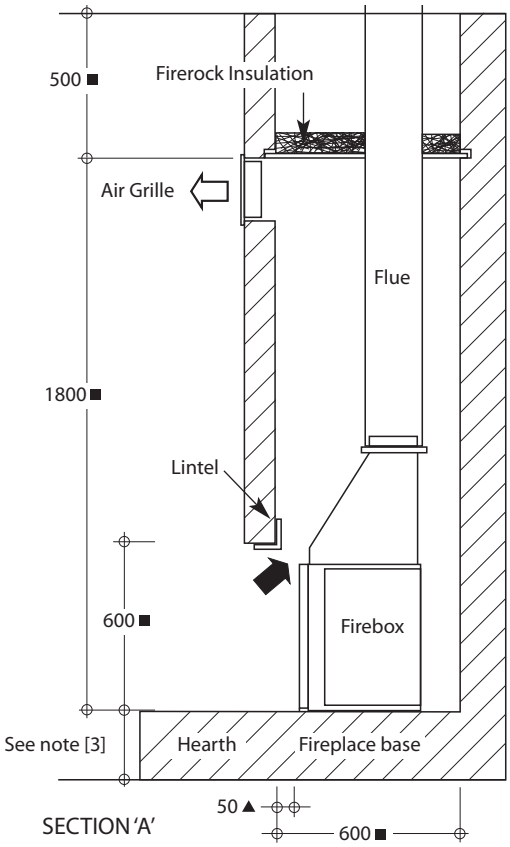

SECTION 'A'

CHEMINÉES PHILIPPE AUSTRALIA

430 Johnston St., Abbotsford, Victoria 3067 Phone: 03 9417 3315
e-mail: sales@wignells.com.au www.chemphilaust.com.au

April 2018

Cheminees Philippe's policy is one of continuous development. We reserve the right to change sizes and specifications without notice.